TOMCAT®

MicroMini

17" - 24" Scrubbers

MADE IN USA

RIDER SCRUBBERS | SWEEPERS | BURNISHERS | CARPET CARE | FLOOR MACHINES

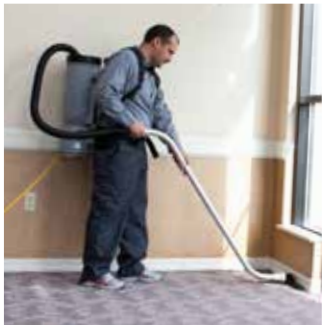

KEY FEATURES

Machine Control Panel uses off-the-shelf toggle and marine duty switches and features universal icons which simplifies training.

Vacuum Muffler allows machine to consistently achieve as low as 65 dBA while thoroughly drying the floor.

70% REDUCTION

EDGE Orbital Scrubhead delivers premier chemical-free floor stripping while reducing water consumption by up to 70%.

Squeegee Adjustments made simple with simple wing-nuts allows for toolless maintenance of the squeegee blade.

Front Fill System features a retractable hose for easy filling on standard sink-faucets and a stainless screen for bucket filling.

Oversized Vacuum Screen Shut-Off quickly arrests overfill issues to protect the Vacuum Motor.

HD LB/KG

High Performance motors and down pressure provides an unmatched standard of cleaning.

APPLICATIONS

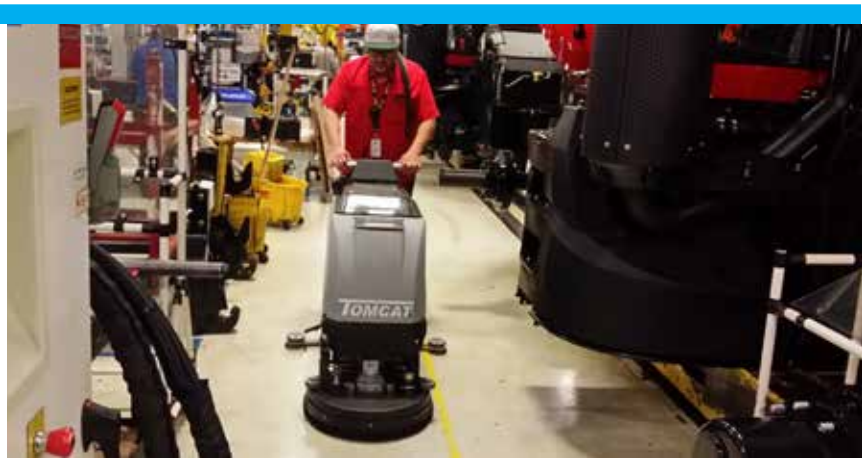

- School Systems
- Sports Arenas
- Retail
- Food & Beverage
- Healthcare
- Grocery Stores
- Automotive
- Airports

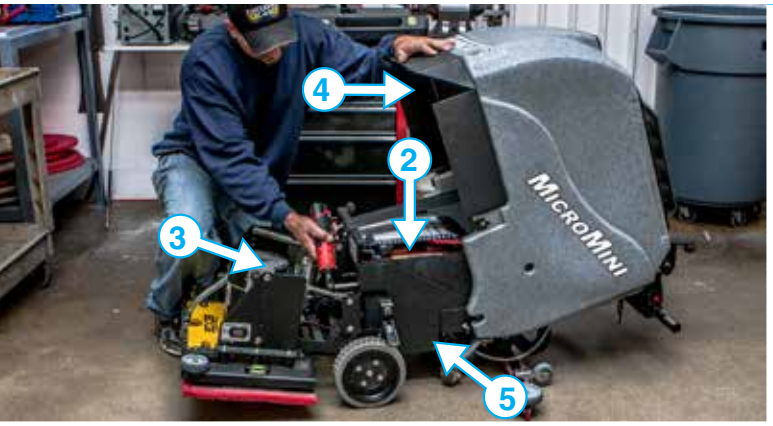

TANKS TIP FOR ACCESS

1. Vacuum Screen & Filter Cleaning
2. Service Batteries
3. Inspect Scrub Motors
4. Inspect Vacuum Motor
5. Inline Solution Filter
6. Drain Saver

Reduce costly repairs associated with clogged floor drains with our Drain Saver Basket.

VIEW INSIDE

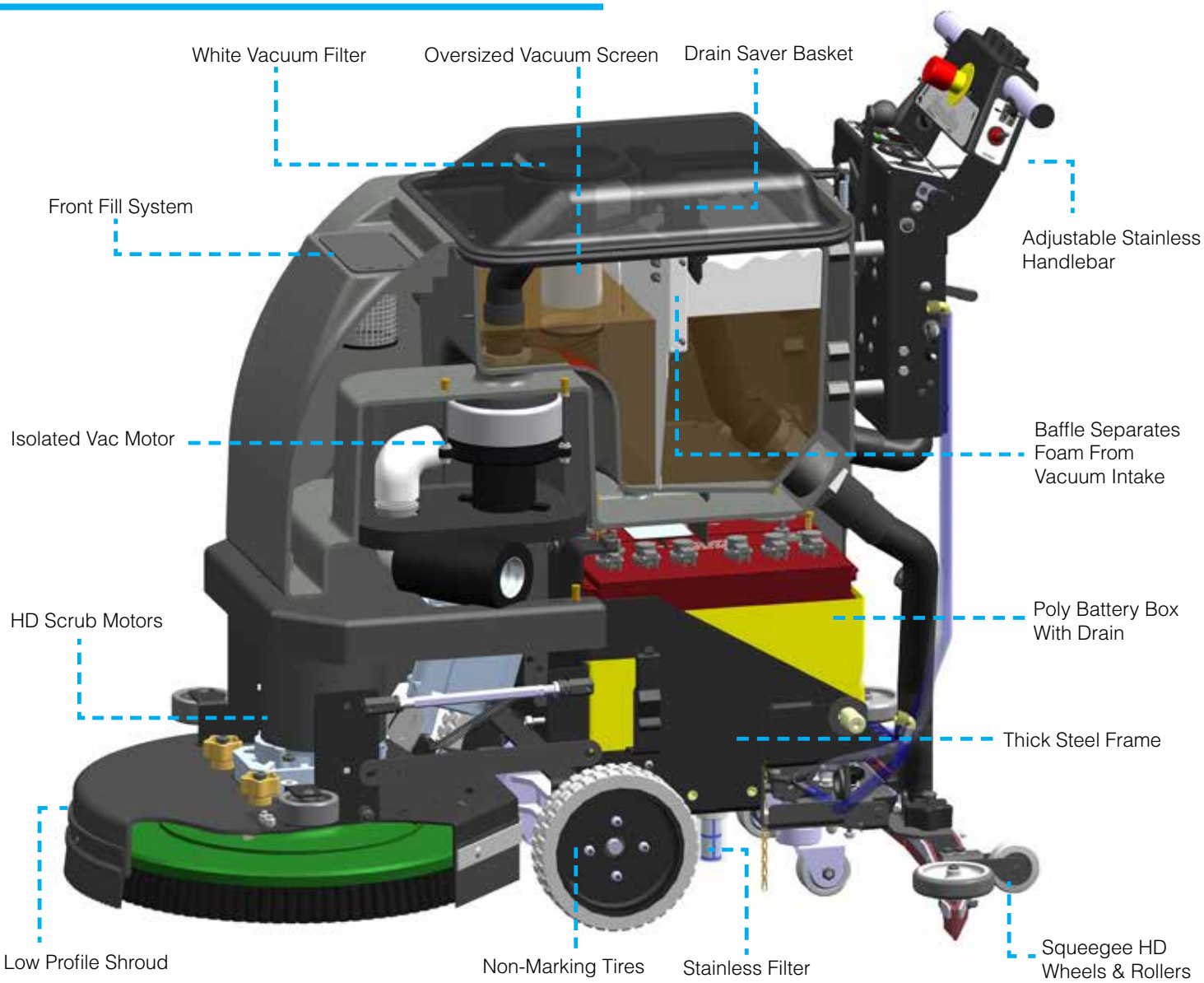

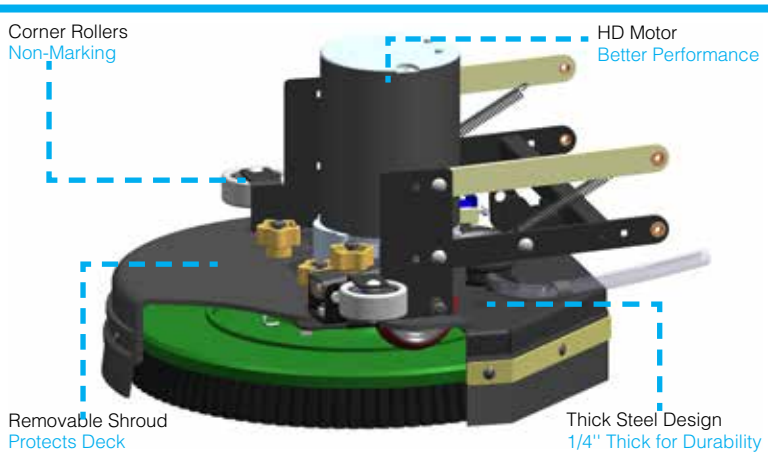

Disk Benefits

- Brush / Pad Selection
- Lowest Maintenance Cost
- Gimballed Drivers Improves Cleaning On Irregular Floors
- Brushes Individually Driven For Unmatched Performance

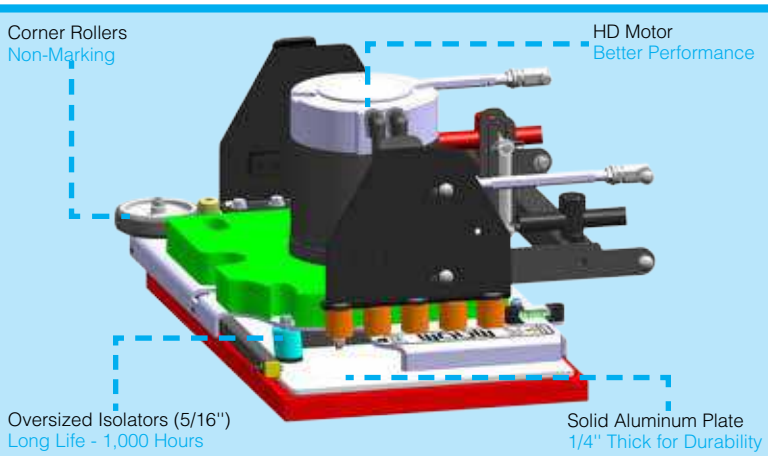

Edge Benefits

- Chemical Free Stripping
- Reduce Slip & Fall Potential
- Earn LEED Credits
- 70% Reduction in Water Usage
- Consistent Results - No Swirl Marks
- Wet screens Wood Gym floors

CALL FOR A DEMONSTRATION

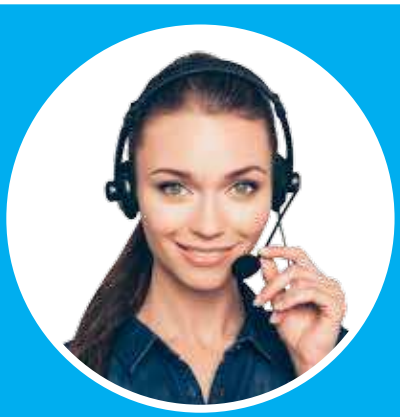

800-450-9824
(+001)-262-681-6470
www.tomcatequip.com

Since 1986, our family owned company has been designing, building and supporting the best in floor maintenance equipment. Our ***Tomcat*** brand services the world with unsurpassed commercial cleaning equipment, continually exceeding expectations and setting the industry bar that much higher.

We've built our reputation by providing the highest value machines and providing local support via 425 distributors in over 42 different countries.

AUTHORIZED DISTRIBUTOR

BODY CONSTRUCTION / DIMENSIONS	
Tank Material:	Poly 5/16" *(7.9 mm)*
Chassis Construction:	1/8" Steel *(3.2 mm)* Powder Coated Steel
Front Wheels (Diameter × Width):	(2×) 8" × 2" *([2×] 20.3 × 5.1 cm)* - Solid Black
Rear Casters (Diameter × Width):	(2×) 2.5" × 1.38" *([2×] 6.4 × 3.5 cm)* - Non-Marking Grey
Size (L × W × H):	42" × 21" × 39" *(106.7 × 53.3 × 99.1 cm)*
Weight (w/o Batteries):	215 - 315 lbs *(97.5 - 142.9 kg)*
Weight (w/ 130 ah Batteries):	380 - 480 lbs *(172.4 - 217.7 kg)*
BRUSH / PAD SYSTEM	
Disk Dimensions: Includes Shroud for Wall Protection	20" - (1×) 20" Diameter *(50.8 - [1×] 50.8 cm)*
Disk Motor:	0.75 hp / 200 rpm *([1×] 559 watts)*
Disk Brush Speed:	200 rpm
Brush Down Pressure:	Up to 100 lbs *(45.4 kg)* / 500 lbs *(226.8 kg)* Actuator Rating
POWER SYSTEM	
System Voltage:	24 VDC
Standard Battery:	130 ah WET
Optional Battery:	150 ah WET / 115 ah AGM
Run Time: **Run times are based on continuous scrubbing run times.	Up to 3.5 Hours**
Charger:	120VAC / 60 Hz Input - 24VDC / 12 amp Output
DRIVE SYSTEM:	
Power:	0.75hp - All Gear / Sealed *(559 watts)* & Pad Assist
Forward Speed:	0 - 230 ft/min / 2.6 mph *(0 - 70 m/min / 4 km/h)*
Scrubbing Speed:	0 - 184 ft/min / 2 mph *(0 - 56 m/min / 3 km/h)*
Reverse Speed:	0 - 130 ft/min / 1.5 mph *(0 - 40 m/min / 2 km/h)*
SOLUTION / RECOVERY SYSTEMS:	
Solution Tank Capacity:	10 Gallons *(37.9 liters)* - w/ Graduated Site Tube
Solution Flow / Filter:	0 - 0.5 GPM / Stainless Inline *(0 - 2 LPM)*
Recovery Tank Capacity:	10 Gallons *(37.9 liters)* - 1.5" diameter Drain Hose
Demisting Chamber:	1.25 Gallons *(4.7 liters)*
Drain Saver:	30 cubic inches *(491.6 cubic cm)*
Vacuum Power:	0.8 hp / 3 Stage *(640 watts)*
Vacuum Specs (Water Lift / Airflow):	70" / 70 cfm *(177.8 cm / 2 cm/m)*
Squeegee:	Curved w/ 2-sided Rear Blade 17D - 30" *(76.2 cm)* 20D - 34" *(86.4 cm)* *Optional* - 26" & 34" *(66 cm & 86.4 cm)*
GENERAL:	
Cleaning Width:	20" - Disk *(50.8 cm)*
Sound Levels: ***Decibel levels for Disk & EDGE per ISO 11201 as recommended by the American Association of Cleaning Equipment Manufacturers & OSHA	65 dBA***
Productivity - Theoretical: ****Productivity is based off of ISSA 2010 Cleaning Times	Up to 15,748 sqft *(1,463 sqm)****
Productivity - Practical: ****Productivity is based off of ISSA 2010 Cleaning Times	Up to 7,308 sqft *(679 sqm)****

Manufactured By:
R.P.S. Corporation
1711 South Street
Racine, Wisconsin 53404 (USA)
Phone: (800) 450-9824
International: (+001) 262-681-6470
www.tomcatequip.com

Copyright R.P.S. Corporation 2017. All rights reserved. All specifications are subject to change without notice.

TC-MICROMINI-BROCHURE (v17.195)